KRONOS

With over 100 years of experience.

Gripto

THE BIGGEST AND MOST EFFECTIVE LOADER FROM KRONOS

OUTREACH 10 M • LIFTING CAPACITY AT TEN METERS OF 630 KG • TURNING MOMENT 30 KNM

MORE POWER, MORE OUTREACH, MORE SPEED, MORE COMFORT

With this development, Kronos has reacted to the requirements of the forestry professionals, who need a stronger and faster crane with approx. 10 metre reach. The new Gripto 1010 is the ideal choice for handling timber combined with a large Kronos 150, 140 or 160 trailer or directly mounted on a tractor. Gripto is also very suitable for feeding a chipper. Even though outreach is 10m, the design and dimensions of the booms are optimized to give good working characteristics working close in. We have put a lot of effort in getting a more equal speed of the knuckle boom throughout the whole working sector. The result is a very precise control of the boom. Furthermore, the Gripto is equipped with a top quality LED working lights on the outer boom for illuminating the grab area.

OUTSTANDING OUTREACH OF 10 METERS

The new Gripto has an outstanding 10 meters outreach combined with a 630 kg lifting capacity at ten meters and a 30 kNm turning moment. Hydraulic hoses and tubes are among the largest in loaders of this size combined with a very slim knuckle boom. The new control system xCrane enables very good individual adjustments for the operator.

MAINTENANCE MADE EVEN SIMPLER

A great deal of effort has been put to ensure easy maintenance. All glide pads are of equal size, nipples are easily accessible, and the replacement of hoses is made easy. The hoses are also very well protected inside the booms and at the crane tip, they go through a new design of the link.

GENUINE KRONOS QUALITY

Kronos has been known for using material of great quality. The new Gripto-loader uses Swedish high strength steel made by SSAB called Strenx-700. The new material has greater strength features than any other steel quality available on the market.

MY INNER + STRENX®

Kronos is the first Finnish manufacturer licensed to use SSAB My inner strenx-brand for marketing purposes.

KRONOS

With over 100 years of experience.

SCANTRAX S.A.
Place Léopold Roger
B-5660 MARIEMBOURG
Tél.: +32.60.31.25.01 - 31.21.94
Fax: +32.60.31.25.85
E-mail: info@scantrax.be
www.scantrax.be

Gripto

TECHNICAL SPECICATIONS

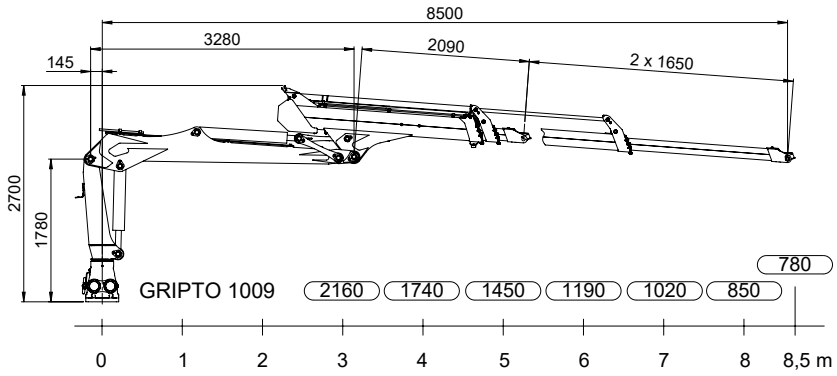

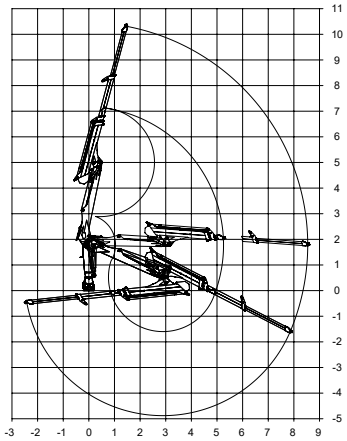

GRIPTO 1009

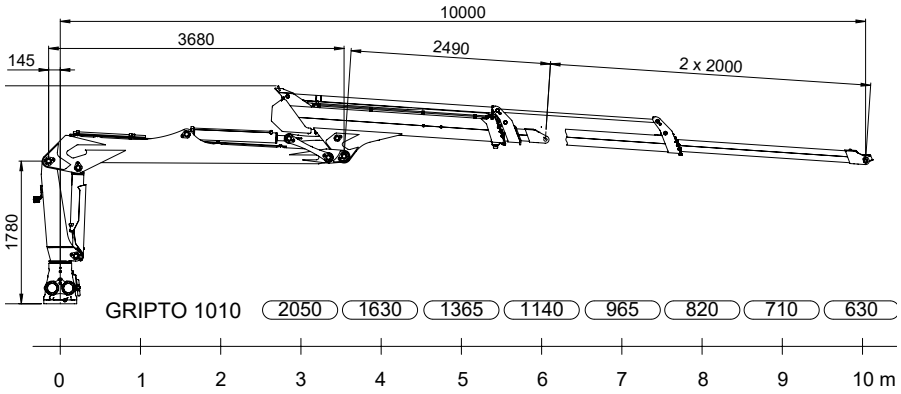

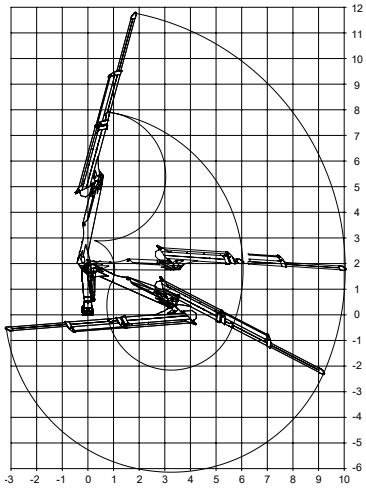

GRIPTO 1010

MODEL	GRIPTO 1009	GRIPTO 1010
Max outreach, [m]	8,5	10
Lifting moment, brutto [kNm]	104	104
Lifting capacity, [kg]		
4 m	1740	1630
at max. reach	780	630
Turning angle boom, [°]	380	380
Turning moment, brutto [kNm]	30	30
Weight, basic crane, [kg]	1550	1600
Recommended rotator GV6, turning moment (Nm)	1600	1600
Recommended grapple size, [m²]	0,26	0,26
Grapple weight, [kg]	250	250
Recommended pump:		
working pressure, [bar]	210	210
output, [l/min]	100-150	100-150

All rights reserved.

Manufacturer
Wikar Oy Ab
68500 KRUUNUPYY

Tel. +358 (0) 6 823 2300
mail@kronos.fi